SOWTER EST. 1941 TRANSFORMERS
A member of the CARNHILL Group

8988 PRODUCT SPECIFICATION

Sowter 8988 SE triode headphone output transformer 10k primary

10k Ohms SE secondary configurable to 600/300/150/40 Ohms

Description

Headphone output transformer designed to be driven from an SE triode output stage. 2W at 50 Hz. Up to 40 mA DC. Suitable for headphones with an impedance in the range 30 to 1000 Ohms. High grade Grain Oriented Silicon Steel (M6) with air gap provides high level capability and low distortion with wide bandwidth and transient response over the full dynamic range. Three separate secondary windings may be connected in series or parallel for 30 to 100, 100 to 250, 250 to 600 or higher Ohm headphones.

Package styles and dimensions

Style S

Package style

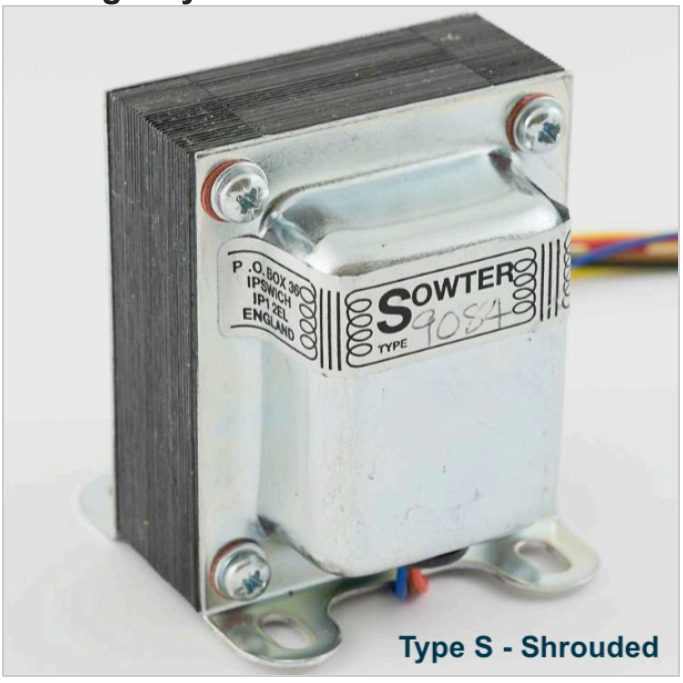

Dimensions drawing

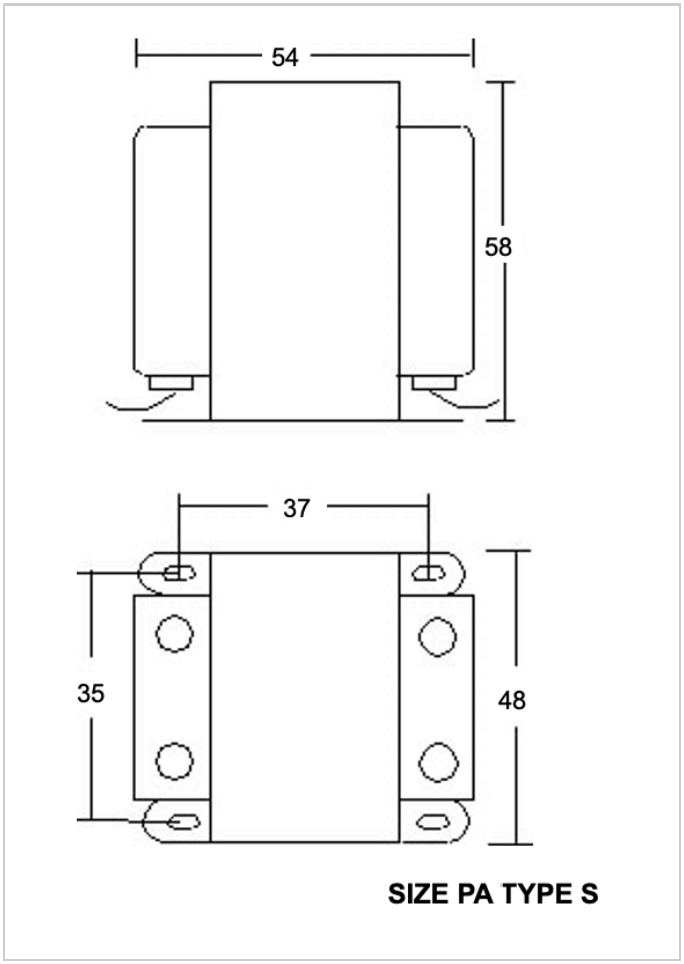

Connection Diagram

COLOUR CODE

8988

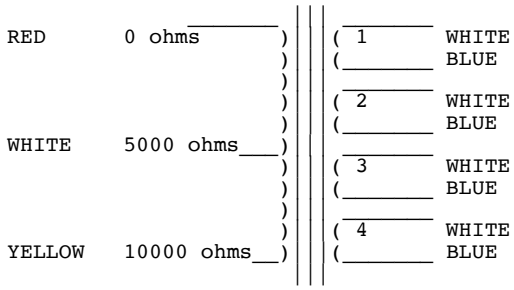

OUTPUT WINDINGS.

There are FOUR EQUAL SECONDARY WINDINGS which can be arranged for loads of 37.5 ohms, 150 ohms, 375 ohms and 600 ohms thus:-

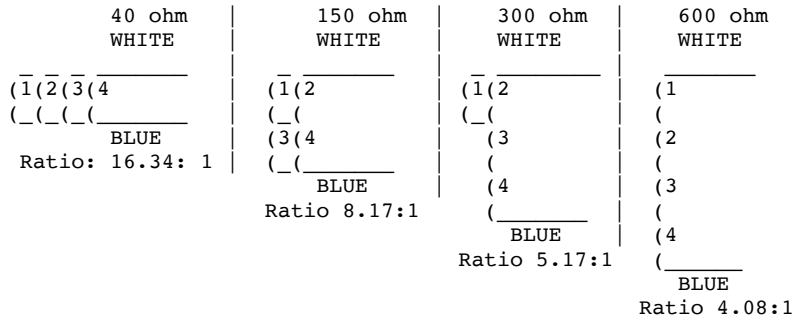

Ratio = Turns ratio when whole primary is used:

8988 Headphone transformer
Low power Single Ended Output transformer for use with triode etc.
10k ohms primary and 4 separate
secondary windings configurable for 600/300/150/40 ohms approx.
2W at 50 Hz. Up to 40 mA dc .
Size "D" Fully shrouded package with colour coded leads.

PDF Created with deskPDF PDF Writer - Trial :: http://www.docudesk.com