SOWTER EST. 1941 TRANSFORMERS
A member of the CARNHILL Group

8424 PRODUCT SPECIFICATION

Sowter 8424 configurable tube interstage transformer dual primary

5k + 5k primary and 5k + 5K fsecondary for or SE or PP tube stages

Description

Configurable tube interstage transformer for driving power output stages. Two identical secondary windings are provided which may be used in parallel for maximum current or in series for maximum voltage drive to SE output stages. The two windings may be used for independent drive of parallel SE stages or used as a phase splitter for PP stages. Two primary windings may be used in series or parallel to give two ratio options. Best performance is obtained when driven from a low impedance. A resistive load across the secondary may be helpful in damping the leakage resonance which can vary due to the grid capacitance of the driven stage.

Package styles and dimensions

Style S

Package style

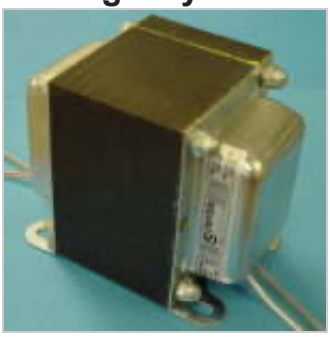

Dimensions drawing

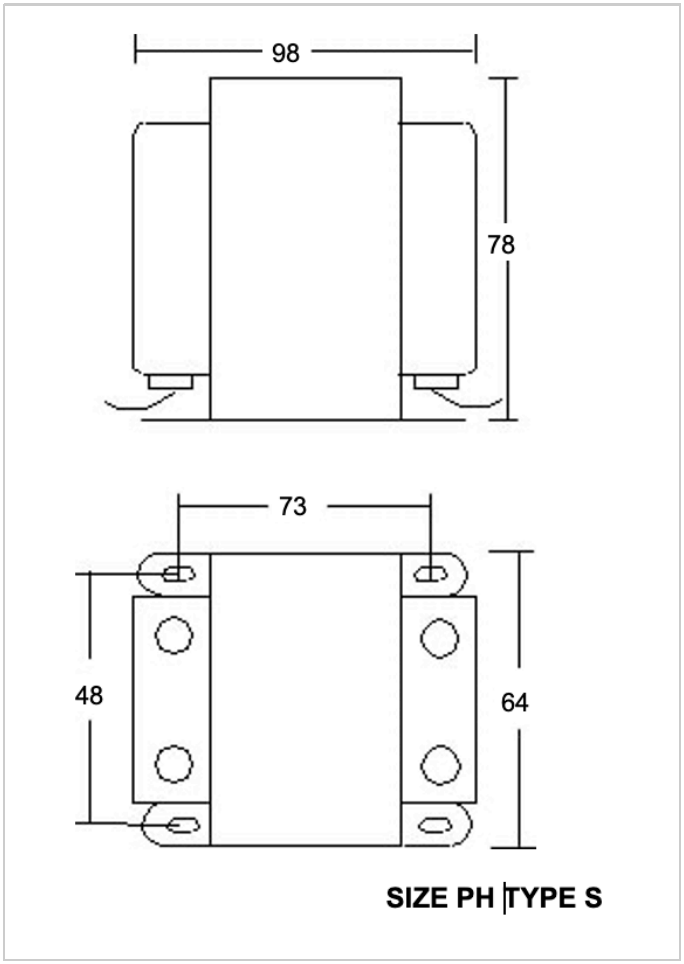

Connection Diagram

COLOUR CODE

8424

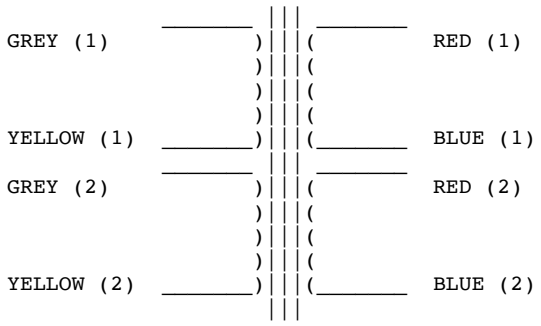

8424 Interstage Transformer for SE to SE or PP
Primary 20k ohms 70 Henry 30 mA dc. (series) or 5k ohms 18 Henrys 100 mA (parallel).
Two equal 5k ohms secondaries which can be used separately, in series or in parallel.
For use with SE drive to SE or PP power stages.
Full geometric balance for near perfect phase splitting.
Fully shrouded package colour coded leads.
Size H.

The data sheet can be viewed on our website www.sowter.co.uk
select Shop Online Then search 8424 click on 8424 then data sheet

PDF Created with deskPDF PDF Writer - Trial :: http://www.docudesk.com