SOWTER EST. 1941 TRANSFORMERS
A member of the CARNHILL Group

8423 PRODUCT SPECIFICATION

Sowter 8423 configurable tube interstage transformer

5k primary and 5K +5K secondaries for SE or PP tube stages

Description

Configurable tube interstage transformer for driving power output stages. Two identical secondary windings are provided which may be used in parallel for maximum current or in series for maximum voltage drive to SE output stages. The two windings may be used for independent drive of parallel SE stages or used as a phase splitter for PP stages. Best performance is obtained when driven from a low impedance. A resistive load across the secondary may be helpful in damping the leakage resonance which can vary due to the grid capacitance of the driven stage.

Package styles and dimensions

Style S

Package style

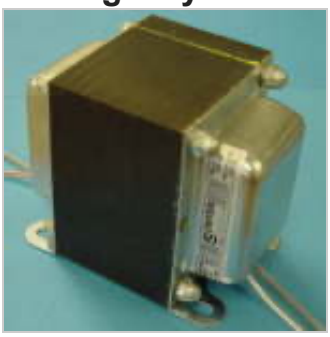

Dimensions drawing

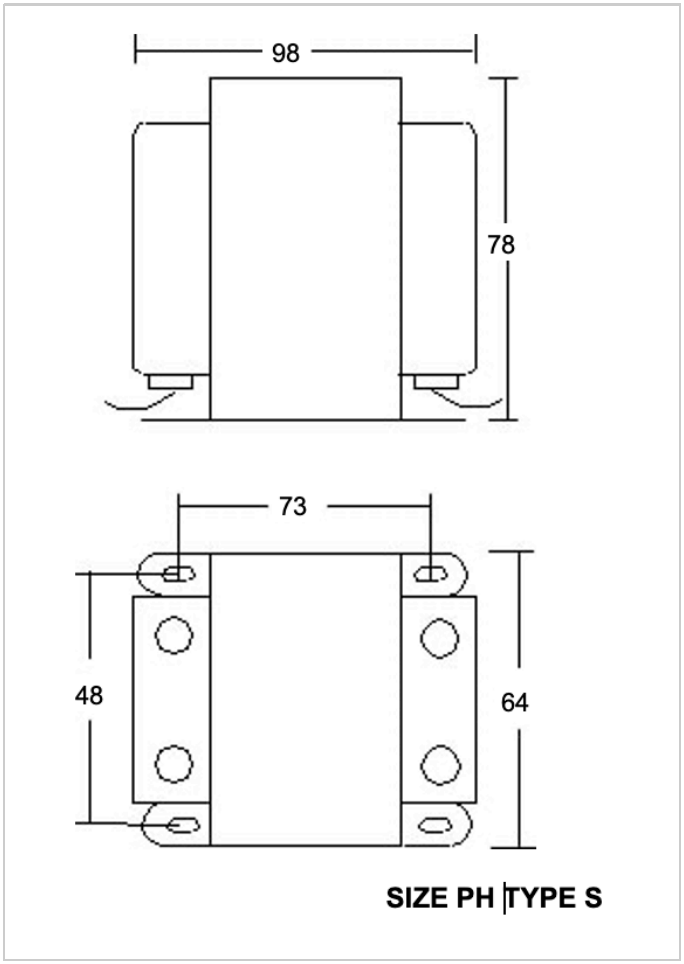

Connection Diagram

COLOUR CODE

8423

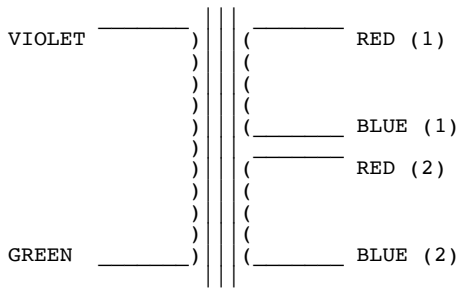

Data sheet can be viewed on the website www.sowter.co.uk
Search 8423 then click 8423

8423 Interstage Transformer for SE to SE or PP
Primary 5k ohms 25 Henry 50 mA dc. Two equal 5k ohms secondaries which can be used separately, in series or in parallel. For use with SE drive to SE or PP power stages. Full geometric balance for near perfect phase splitting. Fully shrouded package colour coded leads. Size H.

PDF Created with deskPDF PDF Writer - Trial :: http://www.docudesk.com