SOWTER EST. 1941 TRANSFORMERS
A member of the CARNHILL Group

1732 PRODUCT SPECIFICATION

Sowter 1732 10k/10k high level solator transformer

10k/10k isolator_balancer transformer hybrid Mumetal/Radiometal core

Description

High_level isolator_balancer transformer for eliminating ground loops with connected equipment. Converts tube amp unbalanced input to balanced. Hybrid core 50% Mumetal / 50% Radiometal. Recommended where maximum headroom is required. +29 dBu.

Package styles and dimensions

Style C

Package style



Dimensions drawing

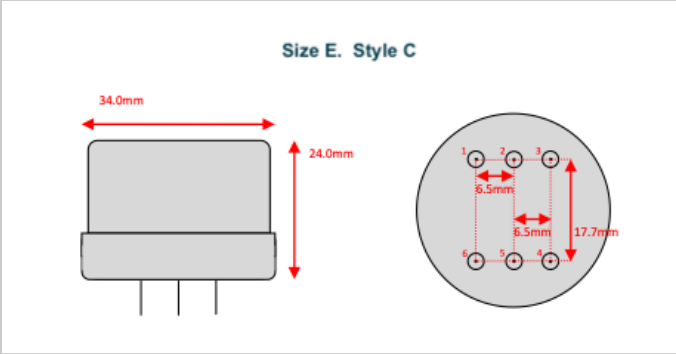

Style E

Package style

Dimensions drawing



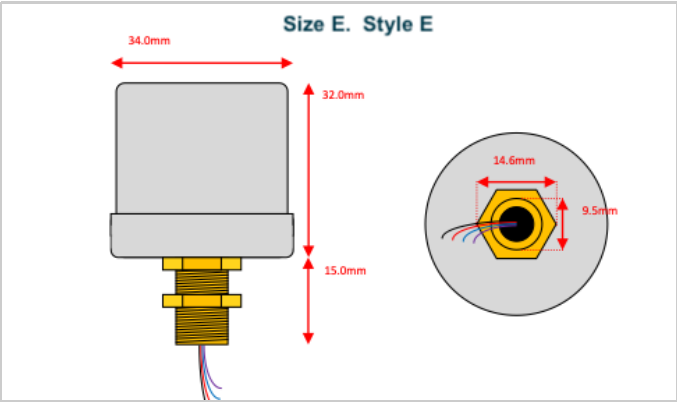

Style F

Package style



Dimensions drawing

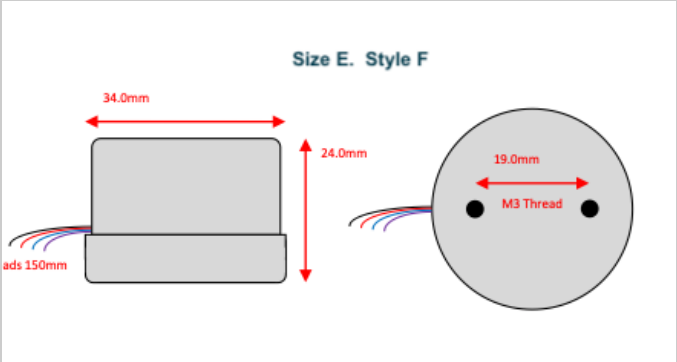

Connection Diagram

COLOUR CODE

1732

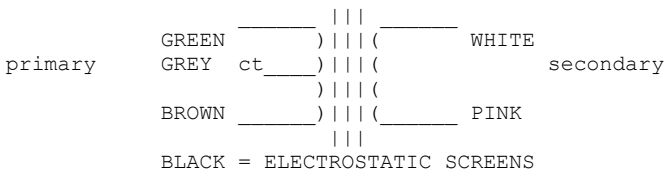

1732 10k/10k Isolator-Balancer
High level. For eliminating ground loops with connected equipment.
Converts tube amp unbalanced input to balanced.
Recommended where maximum headroom is required. +30 dBu