Sowter 1461 2400/600 input/output transformer

Configurable 2400/600 Ohms or 600 Ohms primary 2:1 input/output transformer

Description

Sowter 1461 input/output transformer. Similar to 1460 but with two separate primary windings. May be configured as 600 or 2400 Ohms primary. Input level +24 dBu at 50Hz. Combination Mumetal/Radiometal core. THD 0.01% at 1kHz. Replaces 1380

Package styles and dimensions

Style F

Package style



Dimensions drawing

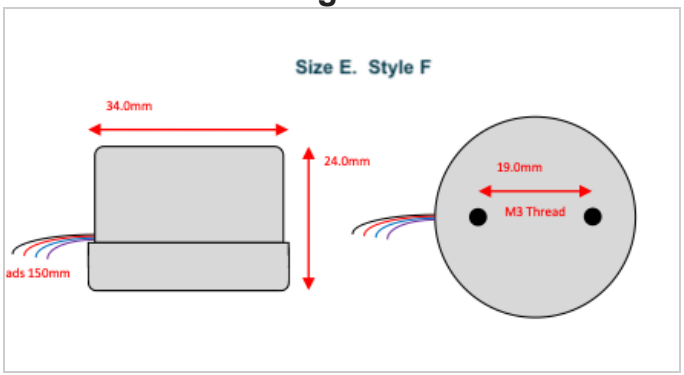

Style E

Package style

Dimensions drawing



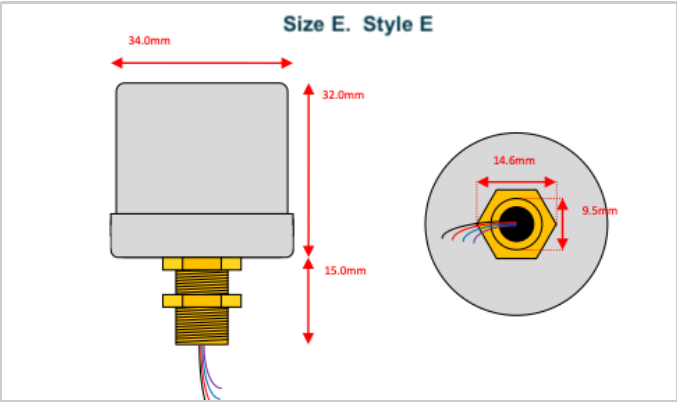

Connection Diagram

COLOUR CODE

1461

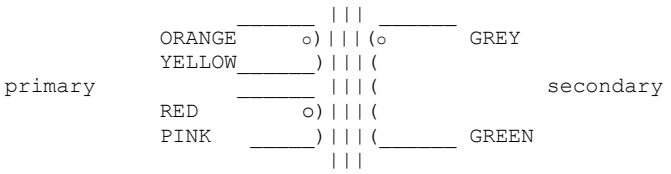

1461 2400/600 2:1 ratio Input/Output Transformer (1380 Replacement)
Similar to 1460 but with 2 separate primary windings. May be configured as 600 or 2400 Ohms primary.
Input level +24 dBu at 50 Hz. . Combination Mumetal Radiometal core. THD 0.01 % at 1KHz.