SOWTER EST. 1941 TRANSFORMERS
A member of the CARNHILL Group

1431 PRODUCT SPECIFICATION

Sowter 1431 Mullard 5-10 EL84 valve output transformer

8k Ohms to 16/8/4 Ohms valve output transformer 10W, 43% UL taps

Description

Sowter 1431 valve amplifier transformer for Mullard 5_10 EL84 amplifier. 8000 Ohms to 16/8/4 Ohms. 43% UL taps. 10W at 20Hz. Fourteen separate winding sections for very wide bandwidth and two_chamber bobbin for full geometric balance. Primary 90H, 210 Ohms.

Package styles and dimensions

Style S

Package style



Dimensions drawing

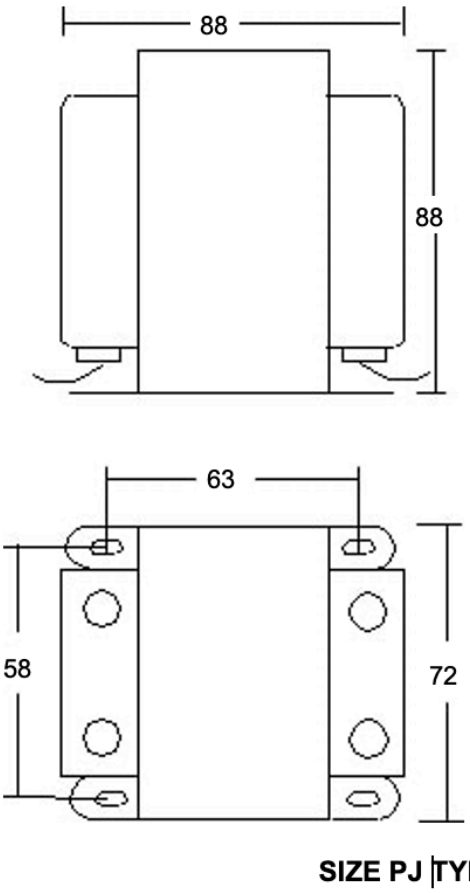

Connection Diagram

1431s

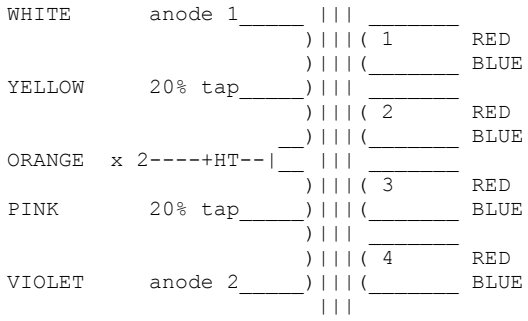

OUTPUT WINDINGS.

There are FOUR EQUAL SECONDARY WINDINGS which can be arranged for loads of 1, 4, 8/9 or 15/16 ohms thus:-

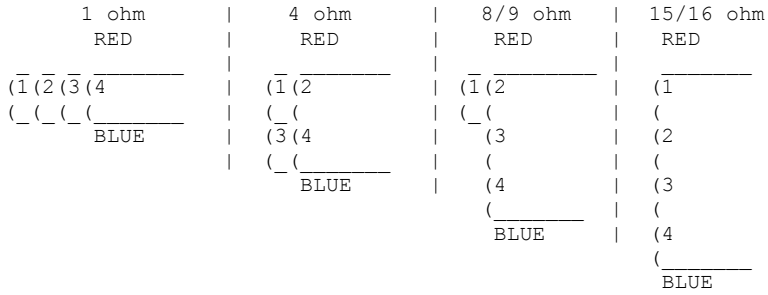

Type 1431 Your ref: AH-51020-120116