SOWTER EST. 1941 TRANSFORMERS
A member of the CARNHILL Group

1232 PRODUCT SPECIFICATION

Sowter 1232 Altec 436C line output transformer

23kCT/150+150 OhmsPP line output transformer 100% M6 core

Description

23kCT/150+150 Ohm output transformer for driving a balanced line from PP 6CG7 etc. 100% M6 core for high level capability and low distortion. Twin secondaries for 600/150 Ohm outputs. Voltage ratio 12.4CT:1+1. Max DC per side of primary 20mA. Similar to Peerless 16402. Colour coded leads. S

Package styles and dimensions

Style S

Package style

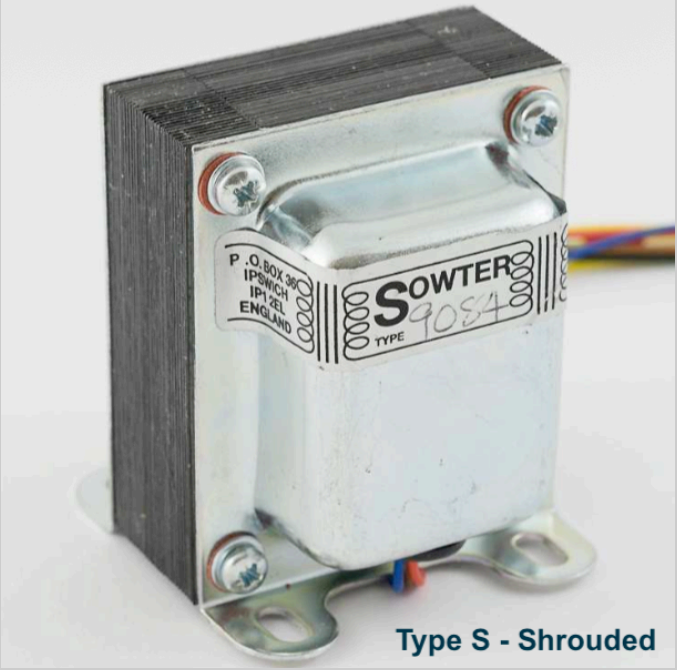

Type S - Shrouded

Dimensions drawing

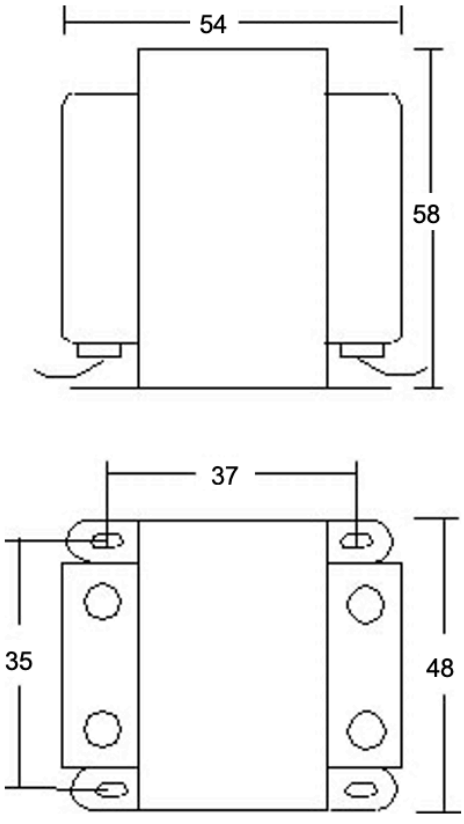

SIZE PA TYPE S

Style E

Package style



Dimensions drawing

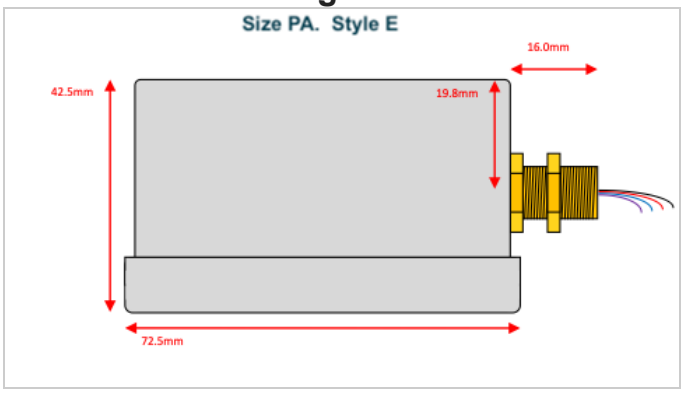

Style U

Package style



Dimensions drawing

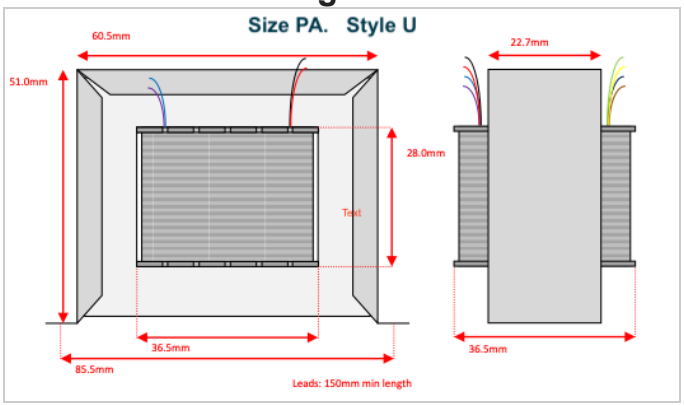

Connection Diagram

COLOUR CODE

1232

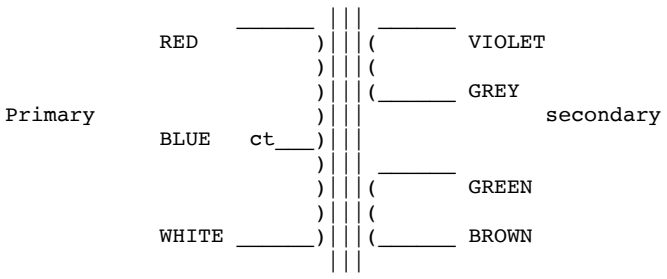

1232 Altec 436C Line output (Original)
23kCT/150+150 ohm output transformer for driving a balanced line from push-pull 6CG7 etc.
100% M6 core for high level capability and low distortion. Twin secondaries for 600/150 ohm outputs.
Voltage ratio 12.4CT:1+1 Max dc per side of primary 20 mA. Similar to Peerless 16402.
Colour coded leads.

PDF Created with deskPDF PDF Writer - Trial :: http://www.docudesk.com