SOWTER EST. 1941 TRANSFORMERS
A member of the CARNHILL Group

1200 PRODUCT SPECIFICATION

# Sowter 1200 output transformer for 1008A mic preamp

### 7000/150+150 Ohms plus feedback winding

## Description

Sowter replacement design for Uinversal Audio Microphone Preamplifier Model 1008A. 7000/150+150 Ohms plus feedback winding. Mumetal can 45 x 72 x 63 . Colour coded leads.

## Package styles and dimensions

### Style E

**Package style**




**Dimensions drawing**

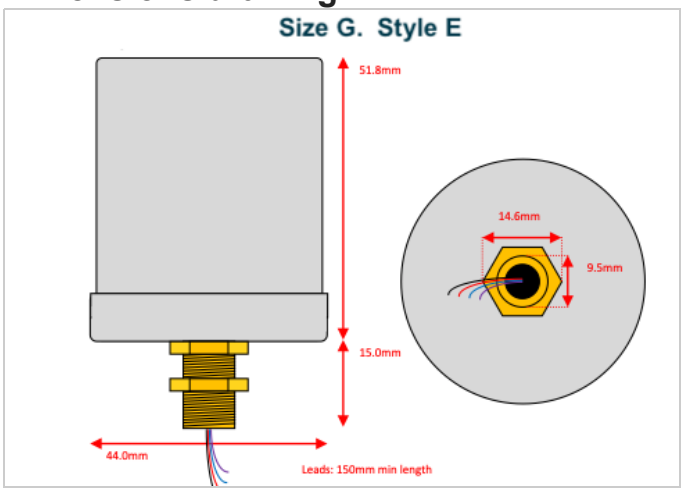


## Connection Diagram

# 1200

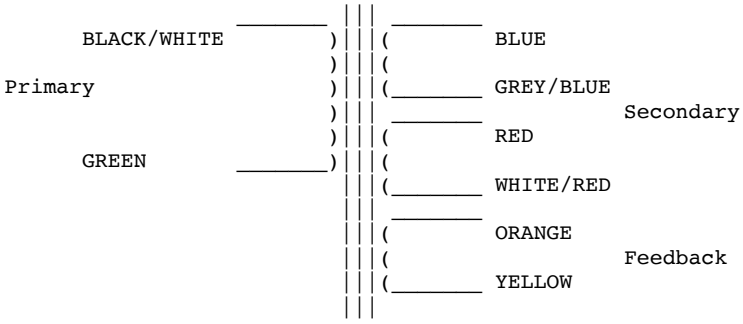


**1200 UA 1008A Mic Pre Amp Output Transformer**
Sowter replacement design for Universal Audio Microphone Preamplifier Model 1008A.
7000/150+150 Ohms plus feedback winding.
Mumetal can size k 45 x 72 x 63 . Colour coded leads.

PDF Created with deskPDF PDF Writer - Trial :: http://www.docudesk.com