SOWTER EST. 1941 TRANSFORMERS
A member of the CARNHILL Group

1121 PRODUCT SPECIFICATION

Sowter 1121 Audio Note M10 31.8H inductor

31.8H inductor in Mumetal can with colour coded leads

Description

Audio Note M10 preamp 31.8H inductor for Audio Note M10 preamp. Mumetal can with colour coded leads.

Package styles and dimensions

Style C

Package style



Dimensions drawing

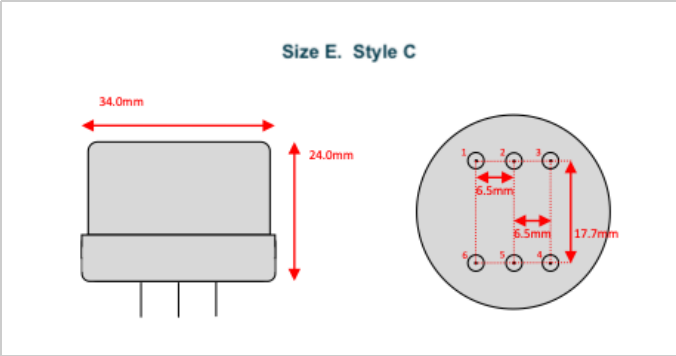

Style E

Package style

Dimensions drawing



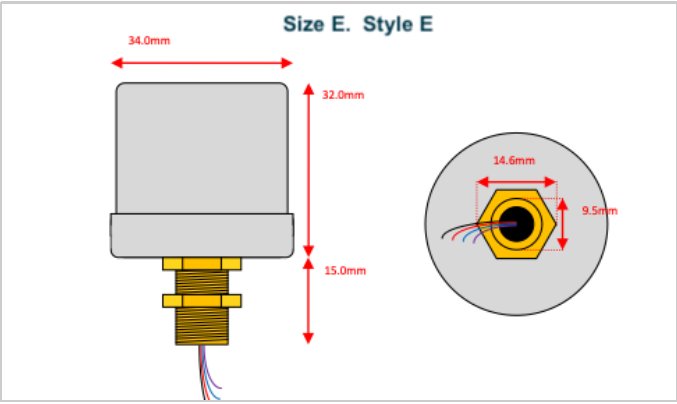

Style F

Package style



Dimensions drawing

