SOWTER EST. 1941 TRANSFORMERS
A member of the CARNHILL Group

0665 PRODUCT SPECIFICATION

Sowter 0665 Fairchild 670 heater transformer T301

Heater transformer for compressor PSU 26.8V/24V 200mA, shrouded

Description

Heater and relay supply transformer Fairchild 670 Compressor. Fully Shrouded package style "S", Colour coded leads. 50/60 Hz. 2 x 120,110 V Primary. Secondary windings: 6.3 V at 5 A, 6.3 at 5A and 12V at 1A. For use with V3 Drip Electronics PCB.

Package styles and dimensions

Style S

Package style



Dimensions drawing

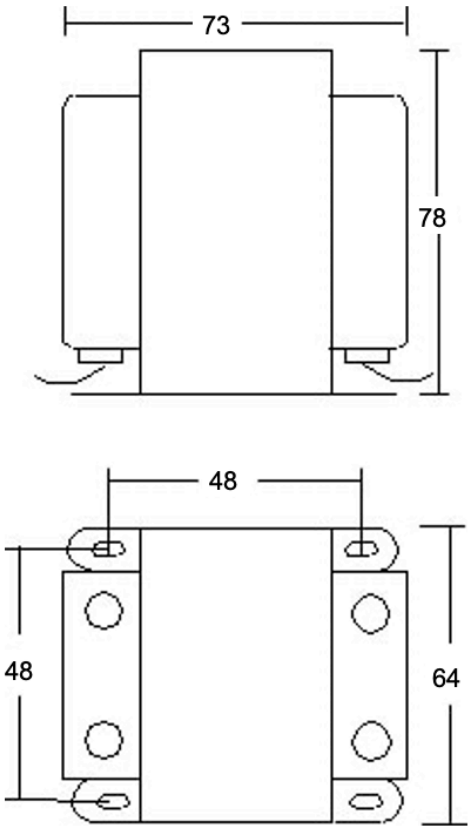

SIZE PE TYPE S

Connection Diagram

COLOUR CODE

0665s

2x 110/120V primary

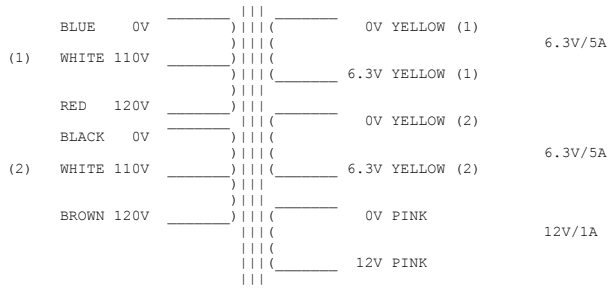

For 240V: Join RED & BLACK. Use BLUE & BROWN
(Isolate both WHITES separately)

For 120V: Join BLUE & BLACK 0V and join RED & BROWN 120V.
(Isolate both WHITES)

For 110V: Join BLUE & BLACK 0V and join both WHITES 110V.
(Isolate RED & Isolate BROWN)

* FOR PRIMARY WINDING WITH SOLID CORE WIRE AND SLEEVING
If the WHITE leads are cut short please ensure the TWO wires inside the Sleeving are joined together in BOTH cases.

The solid wire inside the sleeving is coated with polyurethane and needs to be stripped away and tinned if the leads are shortened. For secondary windings with solid core leads please follow the same process.

FOR FLEXIBLE LEADS PRIMARY AND SECONDARY:
Just cut short and isolate any spare connections

NOTE: A certain amount of mechanical hum is prevalent in mains transformers and can be amplified when bolting to your metal work. Therefore you may find a small rubber gasket or similar material is worth fitting to quieten this hum to its' minimum, but please ensure the frame is grounded to the supply safety earth.

0665 Fairchild 670V3 Heater Transformer.
Heater and relay supply transformer Fairchild 670 Compressor. Drip V3
Fully Shrouded package style "S", Colour coded leads. 50/60 Hz. World Wide primary.
Secondary windings: 6.3 V at 5 A, 6.3 at 5A and 12V at 1A. Size "L". For use with Drip Electronics PCB

E0665

200/250V primary

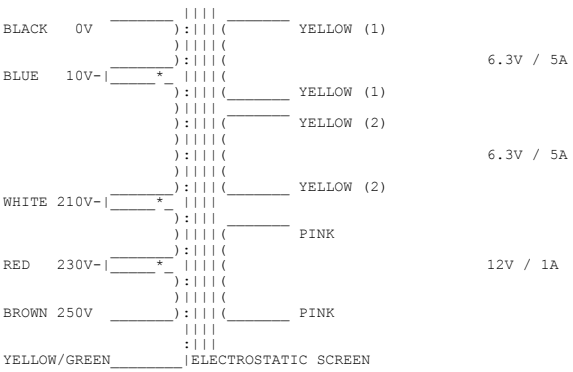

To obtain other inputs use as follows:

10V tap in place of 0V terminal thus:

BLUE/BROWN = 240V BLUE/RED = 220V BLUE/WHITE= 200V

* FOR PRIMARY WINDING WITH SOLID CORE WIRE AND SLEEVING
You will note that the Primary is built up in sections and the two wires in the Blue, White and Red sleeves must always be individually joined to