SOWTER EST. 1941 TRANSFORMERS
A member of the CARNHILL Group

0531 PRODUCT SPECIFICATION

Sowter 0531 Fairchild 670 bias supply transformer

Bias supply transformer M6 core 24V/26.8V taps for bridge rectifier

Description

Bias supply transformer for Fairchild 670 compressor. Low loss Grain Oriented Silicon Steel (M6) core. Colour coded leads. Tested with Drip Electronics 2011 PCB. Fully Shrouded package style "S". 50/60 Hz. 2 x 120,110 V Primary. Secondary windings: 26.8V (for Selenium bridge rectifier) tapped at 24V (for Silicon bridge rectifier) at 200 mA. This is similar to the original Triad part f-40x but has the tap for a silicon rectifier (recommended).

Package styles and dimensions

Style S

Package style



Dimensions drawing

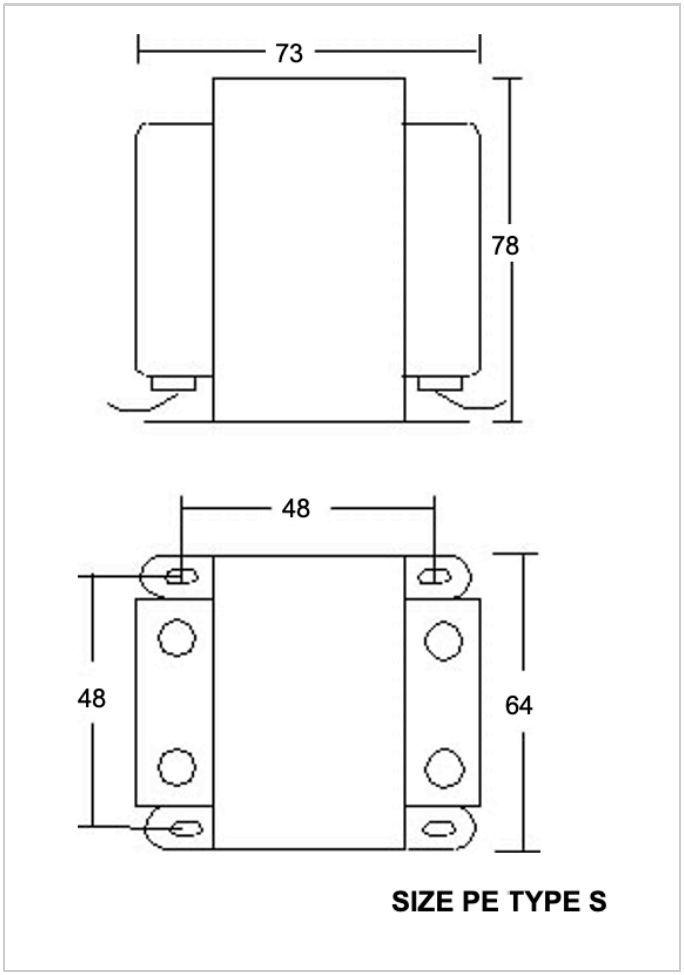

Connection Diagram

COLOUR CODE

0531

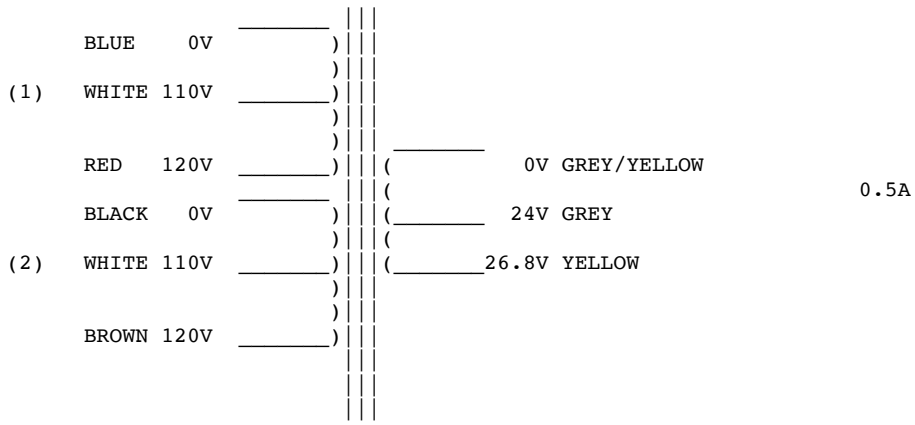

For 240V: Join RED & BLACK. Use BLUE & BROWN
(Isolate both WHITES separately)

For 230V: Join WHITE 1 & BLACK. Use BLUE & BROWN
(Isolate RED & isolate WHITE 2)

For 120V: Join BLUE & BLACK 0V and join RED & BROWN 120V.
(Isolate both WHITES)

For 110V: Join BLUE & BLACK 0V and join both WHITES 110V.
(Isolate RED & Isolate BROWN)

FOR FLEXIBLE LEADS PRIMARY AND SECONDARY:
Just cut short and isolate any spare connections

NOTE: A certain amount of mechanical hum is prevalent in mains transformers and can be amplified when bolting to your metal work. Therefore you may find a small rubber gasket or similar material is worth fitting to quieten this hum to its' minimum, but please ensure the frame is grounded to the supply safety earth.

0531 Fairchild 670 Bias supply Transformer. T301
For Fairchild 670 Compressor T301.
Tested with Drip Electronics 2011 PCB. Fully Shrouded package style "S".
Colour coded leads. 50/60 Hz. Choice of World Wide or European primary.

Secondary windings:

26.8V (for Selenium bridge rectifier) tapped at 24V (for Silicon bridge rectifier) at 200 mA.
Size "E".
This is similar to the original Triad part f-40x but has the tap for a silicon rectifier (recommended).

PDF Created with deskPDF PDF Writer - Trial :: http://www.docudesk.com