SOWTER EST. 1941 TRANSFORMERS
A member of the CARNHILL Group

0526 PRODUCT SPECIFICATION

Sowter 0526 Fairchild 670 mains transformer

Mains transformer M6 core replacement for T302

Description

Low loss Grain Oriented Silicon Steel (M6) core. Colour coded leads. For Fairchild 670 Compressor T302. Tested with Drip Electronics 2011 PCB
Fully Shrouded package style "S". Colour coded leads. 50/60 Hz. 2 x 120,110 V Primary.Secondary windings: 375-0-375 V at 200 mA, 6.3V CT at 5A, 5.0V at 2A.

Package styles and dimensions

Style S

Package style



Dimensions drawing

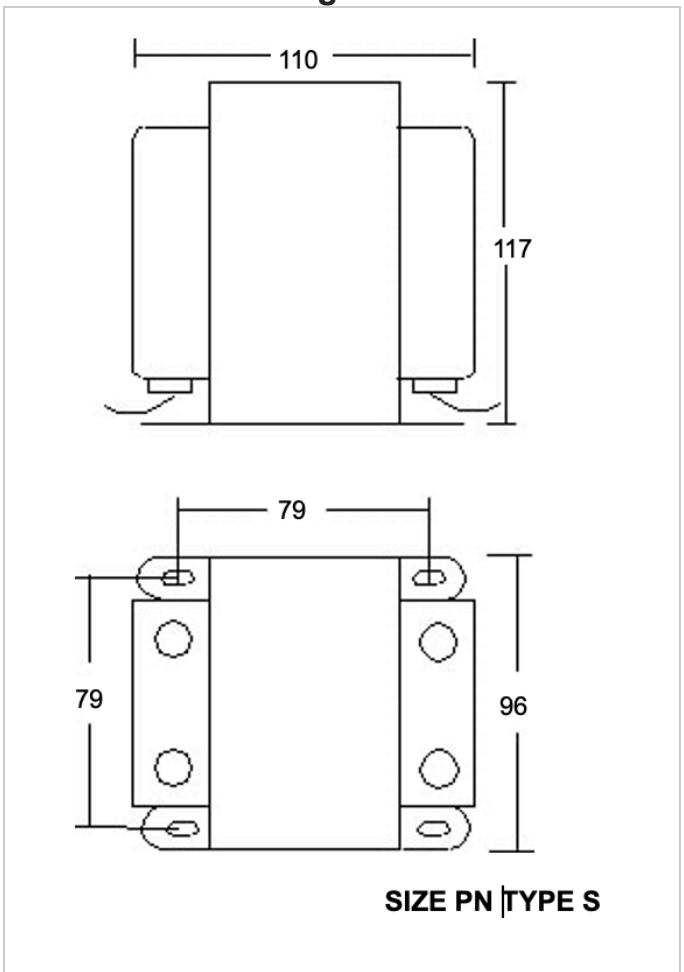

Connection Diagram

SOWTER EST. 1941 TRANSFORMERS

Connection Information

Type: **0526**

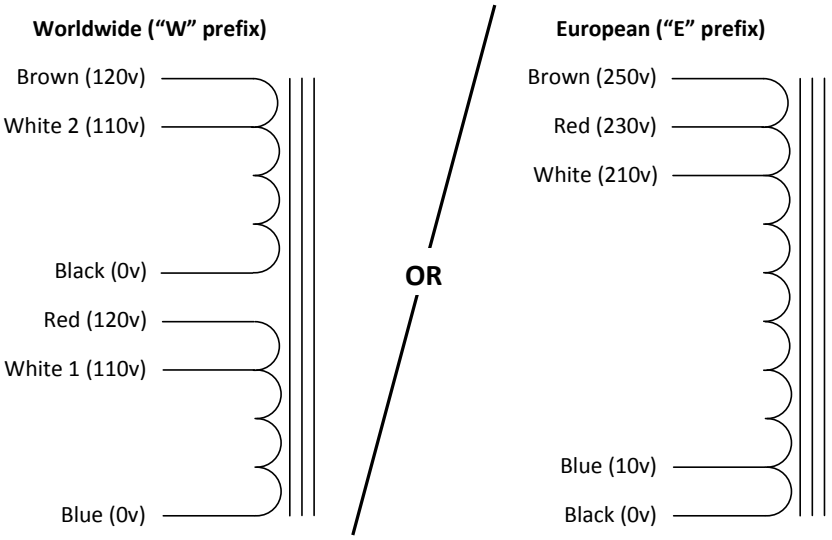

Notes

Visual identification – Worldwide version has two white leads, European version has one.

Worldwide connection options:

110v – N: join Blue and Black, L: join White 1 and White 2, isolate Red and Brown

120v – N: join Blue and Black, L: join Red and Brown, isolate White 1 and White 2

240v – N: Blue, L: Brown, join Red and Black, isolate White 1 and White 2 SEPERATELY FROM EACH OTHER

European connection options:

For mains voltages of 210v, 230v or 250v use Black as Neutral. For 200v, 220v or 240v, use Blue.

ALWAYS isolate all unused leads SEPERATELY FROM EACH OTHER.

A certain amount of operational hum is prevalent in mains transformers, which may be amplified when fixed to metalwork. A rubber gasket, washers or similar may be desirable to quieten this, however a good connection MUST be maintained between the transformer and the supply Earth.

Output Windings

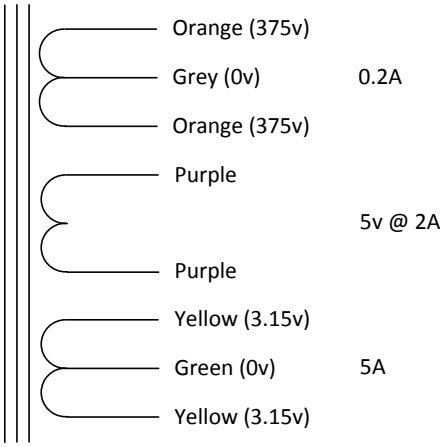

⚠ REMEMBER – Electricity can kill! ⚠

DO NOT work with high voltages unless you are suitably experienced or qualified