SOWTER EST. 1941 TRANSFORMERS
A member of the CARNHILL Group

0295 PRODUCT SPECIFICATION

Sowter 0295 Teletronix LA-2A power transformer, WW primary

Power transformer WW Primary 250-0-250V 40mA 6.3V CT 2A,

Description

Power transformer for Teletronix LA-2A Compressor.
2 x 120,110 V Primary. 250-0-250 at 40 mA. 6.3V CT at 2 A. Internal electrostatic shield for reduction of noise caused by power line transients. Fully shrouded package. Tested with Drip Electronics OPTO4 PCB

Package styles and dimensions

Style S

Package style



Dimensions drawing

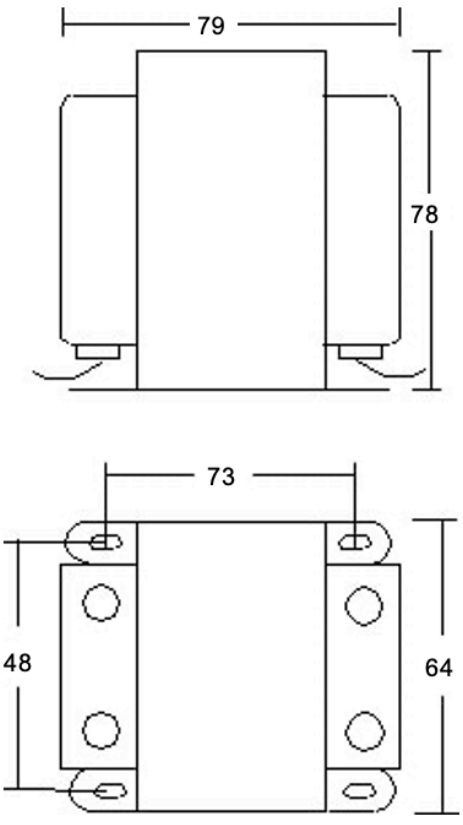

SIZE PF TYPE S

Connection Diagram

COLOUR CODE

0295

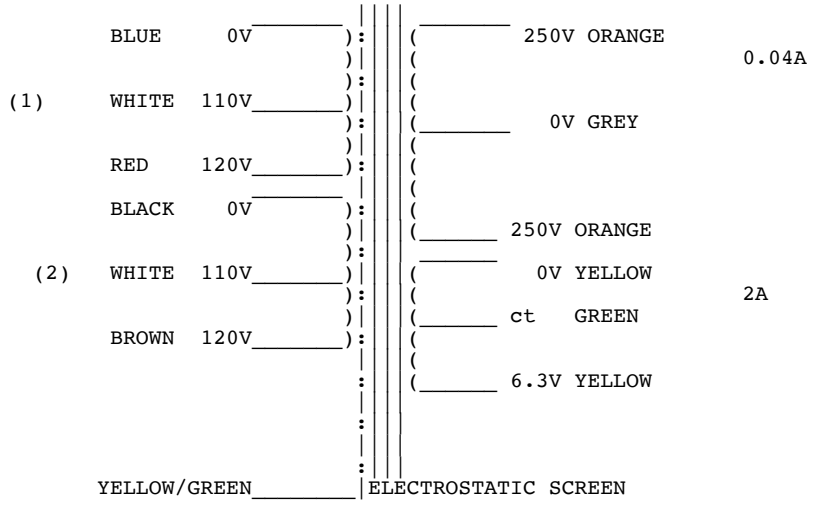

For 240V: Join RED & BLACK. Use BLUE & BROWN
(Isolate both WHITES separately)

For 230V: Join WHITE 1 & BLACK. Use BLUE & BROWN
(Isolate RED & isolate WHITE 2)

For 120V: Join BLUE & BLACK 0V and join RED & BROWN 120V.
(Isolate both WHITES)

For 110V: Join BLUE & BLACK 0V and join both WHITES 110V.
(Isolate RED & Isolate BROWN)

* FOR PRIMARY WINDING WITH SOLID CORE WIRE AND SLEEVING
If the WHITE leads are cut short please ensure the TWO wires inside the sleeving are joined together in BOTH cases.

The solid wire inside the sleeving is coated with polyurethane and needs to be stripped away and tinned if the leads are shortened. For secondary windings with solid core leads please follow the same process.

FOR FLEXIBLE LEADS PRIMARY AND SECONDARY:
Just cut short and isolate any spare connections

NOTE: A certain amount of mechanical hum is prevalent in mains transformers and can be amplified when bolting to your metal work. Therefore you may find a small rubber gasket or similar material is worth fitting to quieten this hum to its' minimum, but please ensure the frame is grounded to the supply safety earth.

0295 Teletronix LA-2A Mains WW Primary.
Power transformer for Teletronix LA-2A Compressor.
2 x 120,110 V Primary. 250-0-250 at 40 mA. 6.3V CT at 2 A.
Internal electrostatic shield for reduction of noise caused by power line transients.
Fully shrouded package. Size "F".

PDF Created with deskPDF PDF Writer - Trial :: http://www.docudesk.com