SOWTER EST. 1941 TRANSFORMERS
A member of the CARNHILL Group

0208 PRODUCT SPECIFICATION

Sowter 0208 Teletronix LA-2A power transformer, EU primary

Power transforme EU primary 250-0-250V 40m, 6.3V CT 2A

Description

Power transformer for Teletronix LA-2A compressor, EU primary. 240, 220, 200, 0, -10 primary. 250-0-250V at 40mA. 6.3V CT at 2A. Internal electrostatic shield for reduction of noise caused by power line transients. Fully shrouded package. Tested with Drip Electronics OPTO4 PCB.

Package styles and dimensions

Style S

Package style



Dimensions drawing

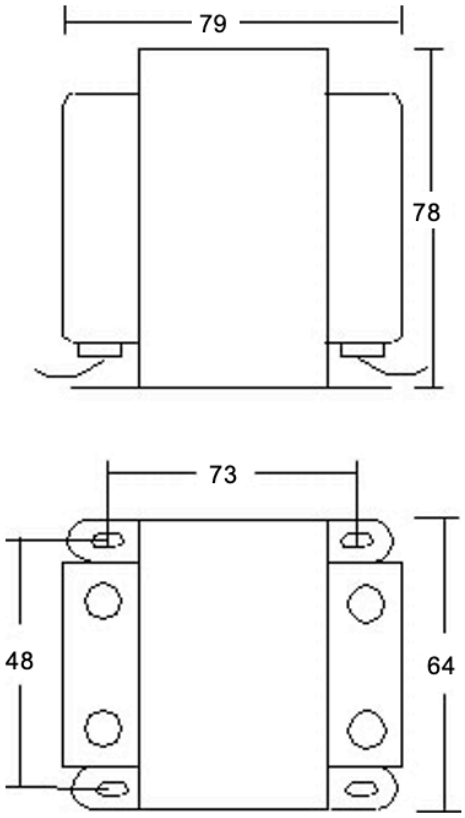

SIZE PF TYPE S

Connection Diagram

COLOUR CODE

0208

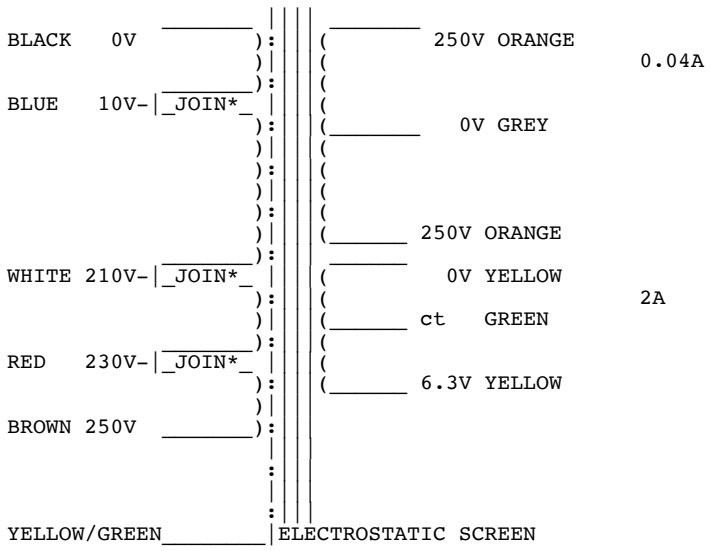

To obtain other inputs use as follows:

10V tap in place of 0V terminal thus:

BLUE/BROWN = 240V BLUE/RED = 220V BLUE/WHITE= 200V

FOR FLEXIBLE LEADS PRIMARY AND SECONDARY
Just cut short and isolate any spare connections

NOTE: A certain amount of mechanical hum is prevalent in mains transformers and can be amplified when bolting to your metal work. Therefore you may find a small rubber gasket or similar material is worth fitting to quieten this hum to its' minimum, but please ensure the frame is grounded to the supply safety earth.

0208 Teletronix LA-2A Mains EU Primary.
Power transformer for Teletronix LA-2A Compressor.
240, 220, 200, 0, -10 Primary.
250-0-250 at 40 mA. 6.3V CT at 2 A.
Internal electrostatic shield for reduction of noise caused by power line transients.
Fully shrouded package. Size "F".
Tested with Drip Electronics OPTO4 PCB

PDF Created with deskPDF PDF Writer - Trial :: http://www.docudesk.com