1380c

```
                  _______ ||| _______
          No.1           )|||(        No.4
                         )|||(
primary                  )|||(              Secondary
                         )|||(
                         )|||(
          No.3   _______)|||(_______ No.6
                         |||
     Pin 5 Electrostatic screen     (Pin 2 omitted on this model)
```

1380c:
This ios type 5069 modified as discussed with Brian Sowter
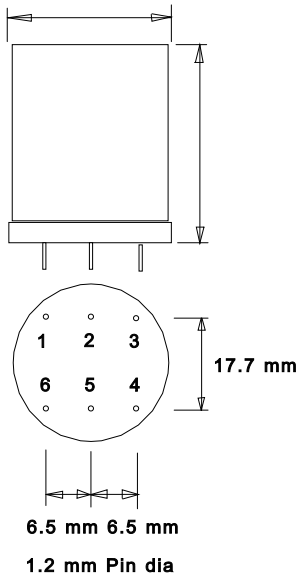
For pinned version can size is 44mm high x 34mm diameter